11.Fuel Injector

A: REMOVAL

1. RH SIDE

1) Release the fuel pressure. <Ref. to FU(H4DOTC)-55, RELEASING OF FUEL PRESSURE, PROCEDURE, Fuel.>
2) Disconnect the ground cable from the battery.

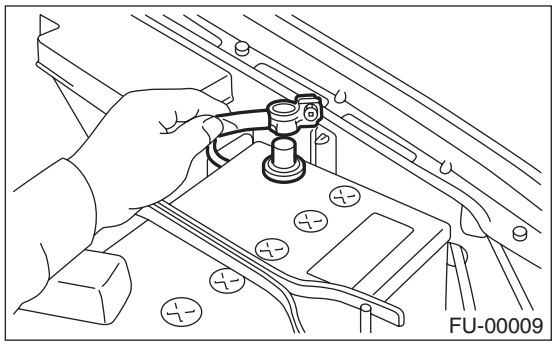

3) Open the fuel filler flap lid, and remove the fuel filler cap.
4) Remove the air cleaner upper cover and air intake boot. <Ref. to IN(H4DOTC)-10, REMOVAL, Air Cleaner Case.>
5) Remove the air cleaner element.
6) Remove the coolant filler tank. <Ref. to CO(H4DOTC)-35, REMOVAL, Coolant Filler Tank.>
7) Remove the power steering pump.
   (1) Remove the front V-belt. <Ref. to ME(H4DOTC)-44, REMOVAL, V-belt.>
   (2) Disconnect the power steering switch connector.

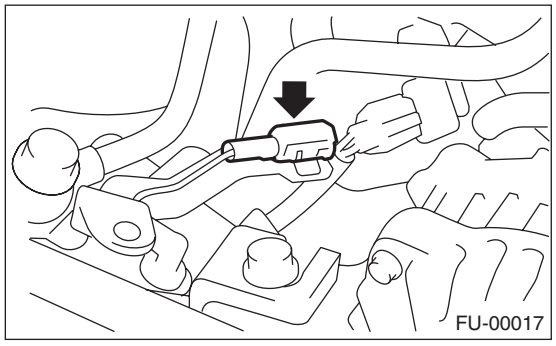

   (3) Remove the bolts which install the power steering pipe bracket to the intake manifold.

NOTE:
Do not disconnect the power steering hose.

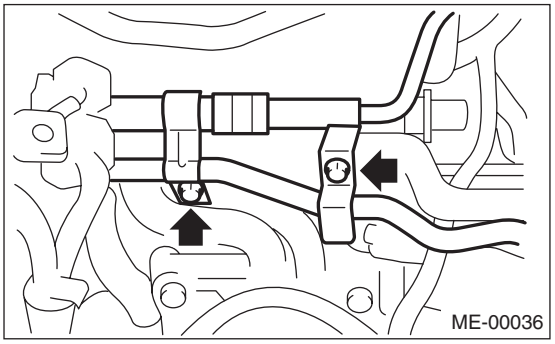

   (4) Remove the bolts, which install power steering pump bracket.

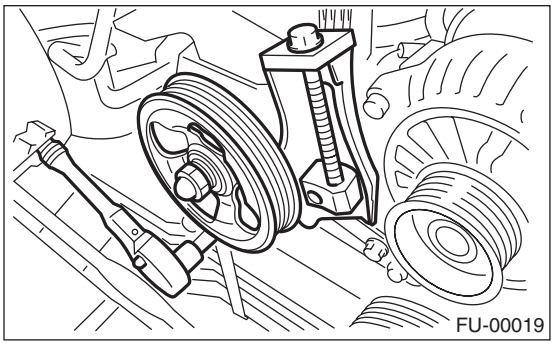

   (5) Remove the reservoir tank from the bracket by pulling it upward.

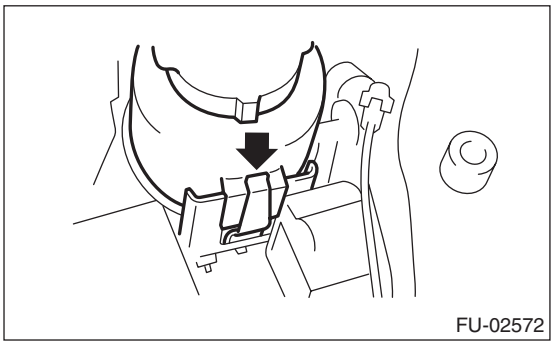

   (6) Place the power steering pump on the right side wheel apron.

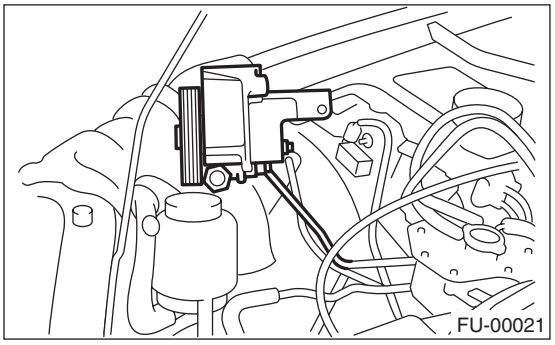

8) Remove the fuel pipe protector RH.
- Except for STI model

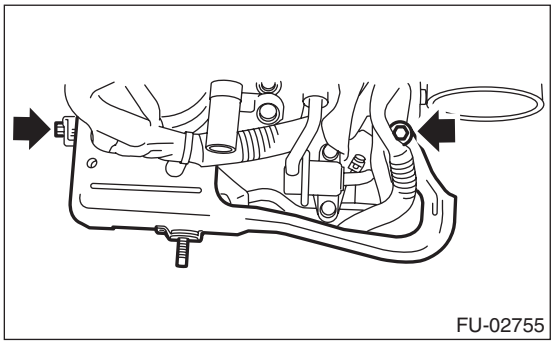

- STI model

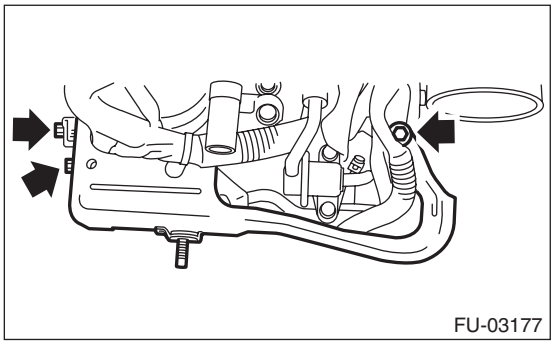

9) Disconnect the connector from fuel injector.

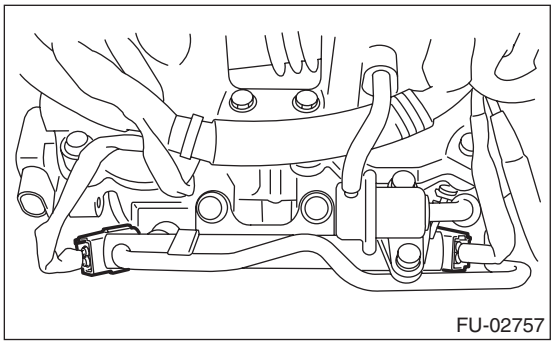

10) Remove the bolt which holds the injector pipe to the intake manifold.

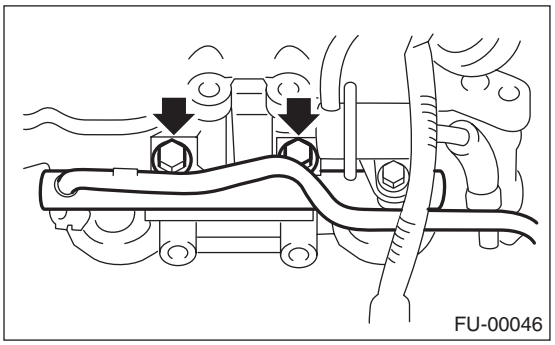

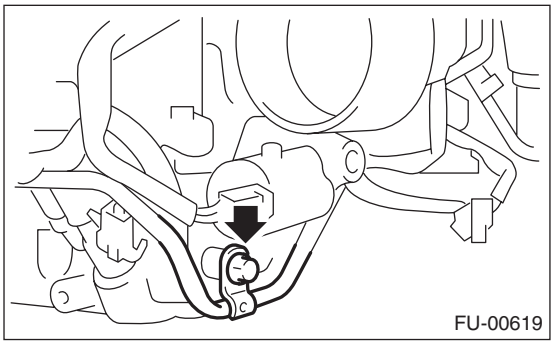

11) Remove the fuel injector while lifting up the fuel injector pipe.

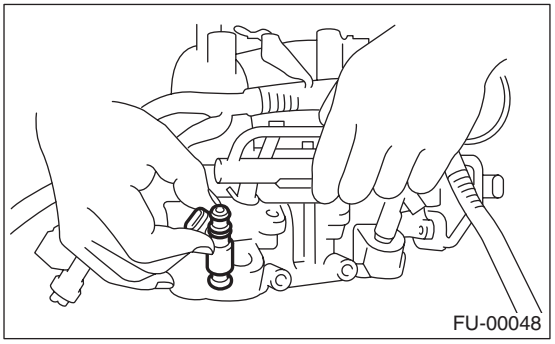

2. LH SIDE

1) Release the fuel pressure. <Ref. to FU(H4DOTC)-55, RELEASING OF FUEL PRESSURE, PROCEDURE, Fuel.>
2) Disconnect the ground cable from the battery.

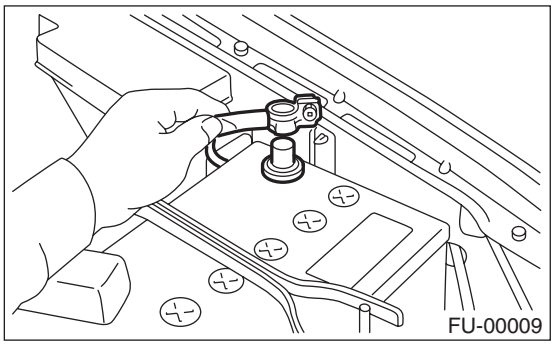

3) Open the fuel filler flap lid, and remove the fuel filler cap.
4) Remove the intake manifold. <Ref. to FU(H4DOTC)-17, REMOVAL, Intake Manifold.>
5) Remove the fuel pipe protector LH.

- Except for STI model

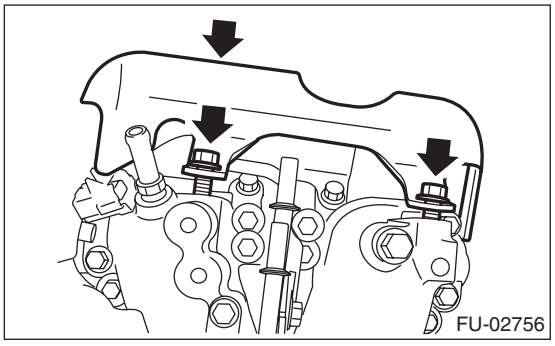

- STI model

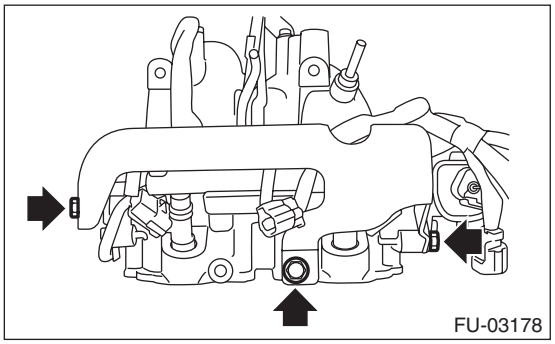

6) Disconnect the connector from fuel injector.
7) Remove the purge control solenoid valve. <Ref. to EC(H4DOTC)-8, REMOVAL, Purge Control Solenoid Valve.>
8) Remove the two bolts which hold fuel pipes on the left side of intake manifold.

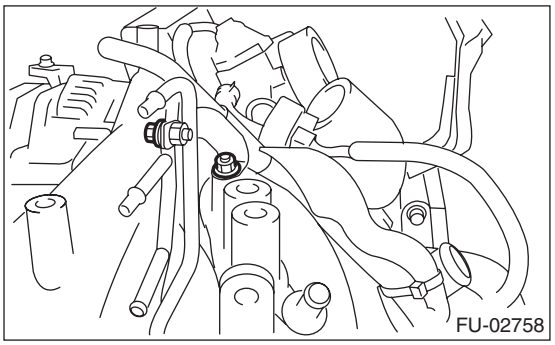

9) Remove the bolt which holds fuel injector pipe onto intake manifold.

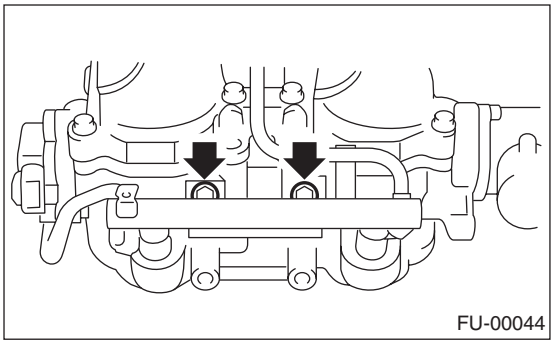

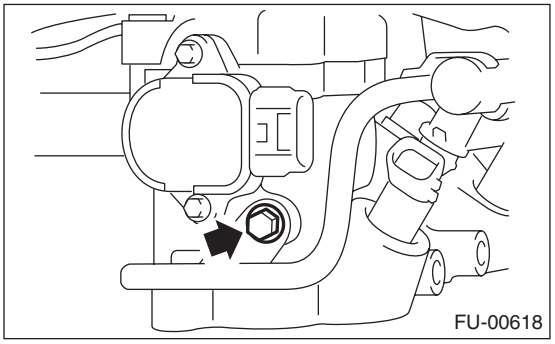

10) Remove the fuel injector while lifting up the fuel injector pipe.

B: INSTALLATION

1. RH SIDE

Install in the reverse order of removal.

NOTE:
Use new O-ring and insulator.

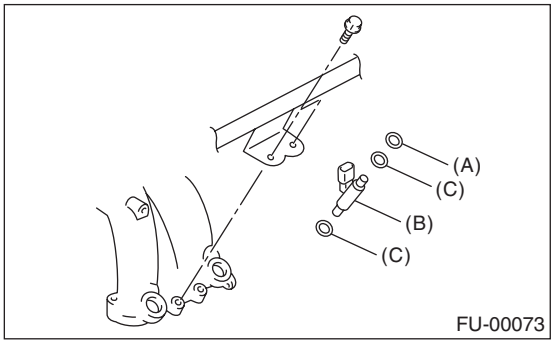

(A) O-ring
(B) Fuel injector
(C) Insulator

Tightening torque:
19 N·m (1.9 kgf-m, 14.0 ft-lb)

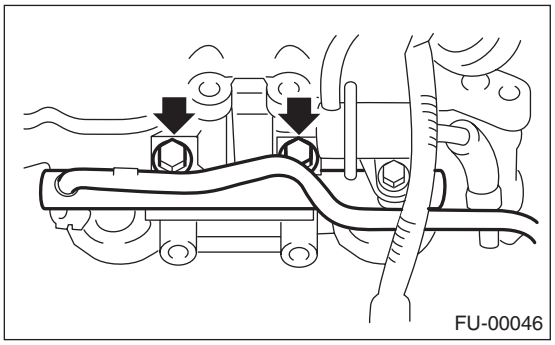

Tightening torque:
19 N·m (1.9 kgf-m, 14.0 ft-lb)

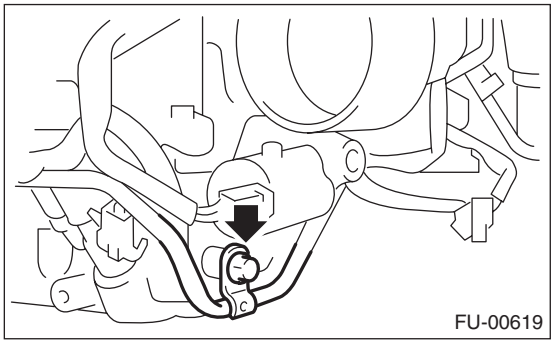

Tightening torque:
19 N·m (1.9 kgf-m, 14.0 ft-lb)

- Except for STI model

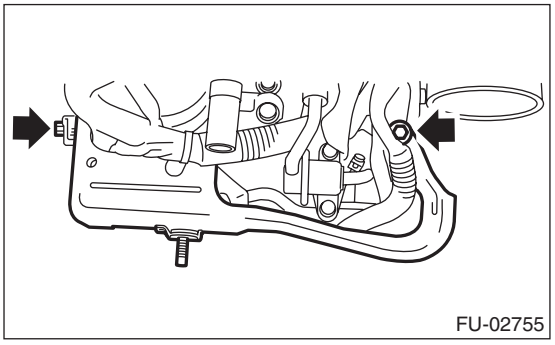

- STI model

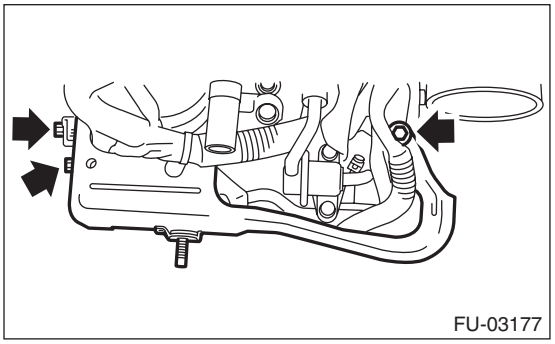

2. LH SIDE

Install in the reverse order of removal.

NOTE:
Use new O-ring and insulator.

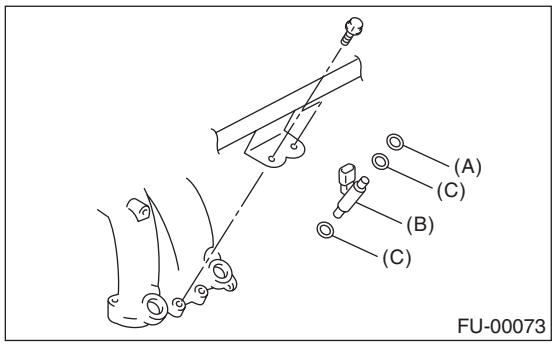

(A) O-ring
(B) Fuel injector
(C) Insulator

Tightening torque:
6.4 N·m (0.65 kgf-m, 4.7 ft-lb)

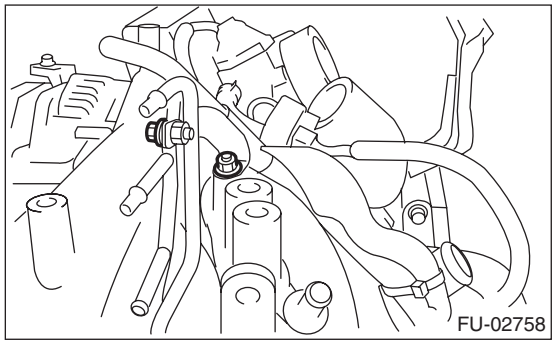

Tightening torque:
19 N·m (1.9 kgf-m, 14.0 ft-lb)

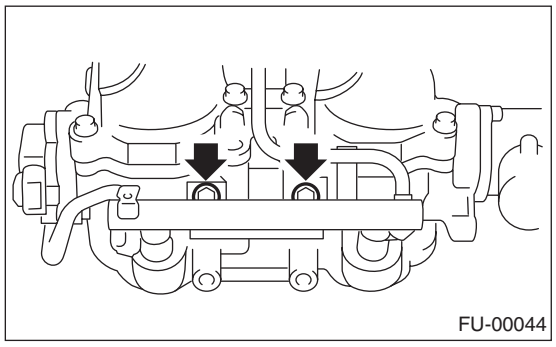

Tightening torque:
19 N·m (1.9 kgf-m, 14.0 ft-lb)

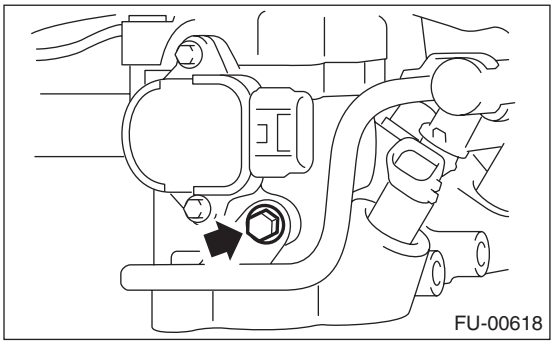

Tightening torque:
19 N·m (1.9 kgf-m, 14.0 ft-lb)

- Except for STI model

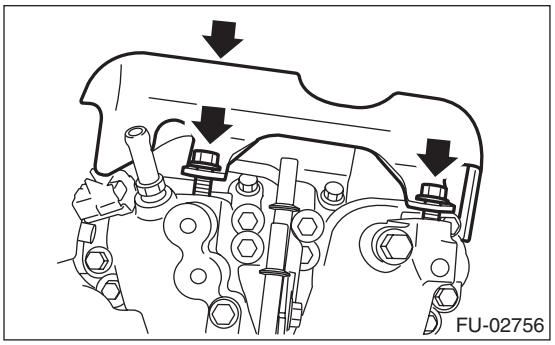
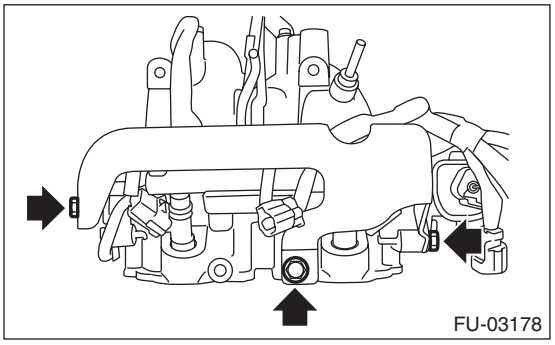
- STI model